MUSIC SYSTEM

USER'S MANUAL

Software Technology Corporation

T H E M U S I C S Y S T E M

User's Manual

Musical Arrangements
by
Jon Bokelman

(C) 1977 Software Technology Corporation

All Rights Reserved

Software Technology Corporation
P. O. Box 5260 San Mateo, CA 94402

(415) 349-8080

IMPORTANT NOTICE

This copyrighted software product is distributed on an individual sale basis for the personal use of the original purchaser only. No license is granted herein to copy, duplicate, sell or otherwise distribute to any other person, firm or entity. This software product is copyrighted and all rights are reserved.

THREE MONTH LIMITED WARRANTY

Software Technology Corporation warrants this product to be free from defects in material and workmanship for a period of three months from the date of original purchase.

This warranty is made in lieu of any other warranty expressed or implied including but not limited to the merchantability or fitness of this product for a particular purpose, and indirect or consequential damages. This warranty is limited in any case to the repair or replacement of the defective part, at the option of Software Technology Corporation, transportation and handling charges excluded.

To obtain service under the terms of this warranty, the defective part must be returned, along with a copy of the original bill of sale, to Software Technology Corporation within the warranty period.

The warranty herein extends only to the original purchaser and is not assignable or transferable and shall not apply to any software product which has been repaired by anyone other than Software Technology Corporation or any product which may have been subject to alterations, misuse, negligence, or accident, or any unit which may have had the name altered, defaced or removed.

THE MUSIC SYSTEM User's Manual

TABLE OF CONTENTS

I. INTRODUCTION 1

II. THE MUSIC SYSTEM CIRCUIT BOARD

A. Circuit Board Assembly Tips 3
B. Circuit Board Parts List 4
C. Circuit Board Assembly Procedure 5
D. Circuit Board Assembly Aids 7

III. THE MUSIC PROGRAM

A. The Command Processor 8
B. The File Editor 11
C. The Compiler 12
D. The Tone Generator 18
E. Rules of Thumb 20

IV. HOW TO USE THE MUSIC 22

Detailed explanation including many examples

APPENDICES

A Musical Note Symbols - Figure 1.....27
B Sarabande, an example - Figures 2 & 3.....28 & 29
C High Level Music Language Summary.....30
D Error Codes.....33
E SOLOS/CUTER Interface Specifications.....34

I. INTRODUCTION

Perhaps you have a computer and have been wondering: "What else can I do with it?"

Perhaps you are a musician and would like to investigate computer generated music.

Perhaps you would like to play a concert.

The Software Technology Music System provides these capabilities and more. We just call it "The Music System".

The Music System is an integrated package containing this manual, a circuit board kit, and a cassette containing the Music Program itself. The primary element of the system is the Music Program itself which performs the actual synthesis of notes being played. All that is needed in addition to the Music System is: an 8080 based system with at least 4K of memory (8K or more, however, is recommended), SOLOS, CUTER or other compatible interface (a SOLOS/CUTER surrogate can easily be implemented), some I/O device (keyboard, display or other ASCII type terminal), an amplifier, stereo or other sound system including all interconnecting cables.

The Music Program is composed of four functional sections:

The Command Processor

What the Music Program does is controlled by user COMMANDS. The Command Processor determines what to do next.

The File Editor

The music is transcribed into a high level language which is easily understood by the human and the computer. The File Editor provides the means by which a score can be entered and altered.

The High Level Music Language Compiler

Although the high level music language is easily understood by the computer, it must be converted into an internal computer code before it can be played. The Compiler analyzes the music language and produces an internal computer code which describes the tones to be played.

I. INTRODUCTION (cont.)

The Tone Generating Subroutines

Once a score has been entered into a file and converted into an internal computer code, the music can be played. The Tone-Generating Subroutines produce the waveforms dictated by the internal computer code.

II. THE MUSIC SYSTEM CIRCUIT BOARD

This section describes the hardware interface required by the Software Technology Music System. The hardware interface is provided in kit form as an integral part of the Music System, and the kit is S-100 Bus compatible.

A. Circuit Board Assembly Tips

1. Read through this section before you begin to assemble your Music System circuit board.

2. In assembling this circuit board, you will be following a step-by-step assembly procedure. Follow the instructions in the order given. Check off each step as you complete it. This will minimize the chance of omitting a step or a component.

3. When installing components, make use of the assembly aids which are a part of the circuit board as well as the assembly drawing. The circuit reference (R1, C2, for example) for each component is on the circuit board at the location of its installation.

4. To simplify reading resistor values after installation, install resistors so that the color codes read from left-to-right and top-to-bottom as appropriate.

5. Install components as close to the board as possible.

6. All components are installed and soldered on the same side of the circuit board--the side with the traces and legends.

7. Soldering tips: use a low wattage iron (25 watts maximum); solder neatly and as quickly as possible; DO NOT press the tip of the iron onto a pad or trace. To do so may cause the pad or trace to "lift" off the board causing permanent damage.

   Be sure to heat the joint to be soldered so that the solder will flow and form a good mechanical and electrical connection.

8. Never install or remove a circuit board while the power is on. To do so could cause serious damage.

9. Before applying power, make sure that the circuit board is installed properly. The front side of the board contains all legend traces and soldered components. It should be installed in your computer with the front located as other circuit boards and not backwards or upside down. If you are at all unsure, please check with your dealer.

II. THE MUSIC SYSTEM CIRCUIT BOARD (cont.)

10. In addition to the parts supplied, the following tools and materials are recommended for assembling this circuit board:

    a. soldering iron, 25 watts
    b. diagonal cutters
    c. needlenose pliers
    d. a suitable cable to allow connection of the circuit board with your amplifier, stereo system or tape machine.

B. Circuit Board Parts List

Check off parts received against this list.

	Quantity	Description	Circuit Reference
Resistors			
( )	1	1K Ohm,1/4 watt,10% brown/black/red	R1
( )	1	10K Ohm,1/4 watt,10% brown/black/orange	R2
( )	1	100 Ohm,1/4 watt,10% brown/black/brown	R3
Capacitors			
( )	2	.1uf Ceramic Disc	C1 and C2
Miscellaneous			
( )	1	Circuit Board (#B0400)	
( )	2	Cable ties	
( )	1	Length of Solder	

Please follow the assembly instructions in the order specified.

II. THE MUSIC SYSTEM CIRCUIT BOARD (cont.)

C. Circuit Board Assembly Procedure

CAUTION: Mount and solder all components on the front side of the circuit board. The front side of the circuit board contains the traces and legends.

( ) STEP 1

Make sure the board is properly oriented. The legends on the board should be facing you. All components will be mounted and soldered on this side of the board.

( ) STEP 2

Install resistors (R1, R2 and R3 - see parts list) in the indicated locations. Bend the leads to fit the distance between the mounting holes, insert the leads, pull the resistor down snug to the board, solder (on the same side of the board as the resistor) and trim the excess leads from the back of the board.

SAVE the excess leads for the jumper wire in Step 4.

( ) STEP 3

Install capacitors (C1 and C2 - see parts list) in the indicated locations. Bend the leads to fit the distance between mounting holes, insert the leads, pull the capacitor down snug to the board, solder (on the same side of the board as the capacitor) and trim the excess leads from the back of the board.

Disc capacitor leads may be coated with wax during the manufacturing process. Be sure to remove any wax prior to inserting the leads.

( ) STEP 4

A piece of an excess resistor lead from Step 2 will now be used as a jumper. The output level is jumper selectable to be either "HI" (for an auxilliary input to an amplifier or tape machine) or "LO" (for the MIC input of a tape machine). This jumper is usually made to select the "HI" level output. Insert the jumper between the indicated mounting holes, solder (on the same side of the board as the jumper wire itself) and trim the excess from the back of the board.

II. THE MUSIC SYSTEM CIRCUIT BOARD (cont.)

( ) STEP 5

The output of the Music System circuit board may be connected to most amplifiers, stereo systems or tape machines. Select the connecting cable best suited to your needs and solder one end of this cable to the output mounting holes on the circuit board. Two mounting holes (+) and (GND) are provided for this purpose.

( ) STEP 6

Two cable ties are provided to secure the output cable as well as to provide easier access to the circuit board when mounted within your computer. Two holes are provided (one on each upper corner of the circuit board) for this purpose.

( ) STEP 7

Install the Music System circuit board in your computer and connect the output cable to your amplifier, stereo system or tape machine.

CAUTION: An improperly assembled circuit board or an improperly installed circuit board may damage your computer, amplifier, stereo system or tape machine. Check with your dealer if you have any doubts regarding the assembled board or proper installation procedure for your computer.

II. THE MUSIC SYSTEM CIRCUIT BOARD (cont.)

D. Circuit Board Assembly Aids

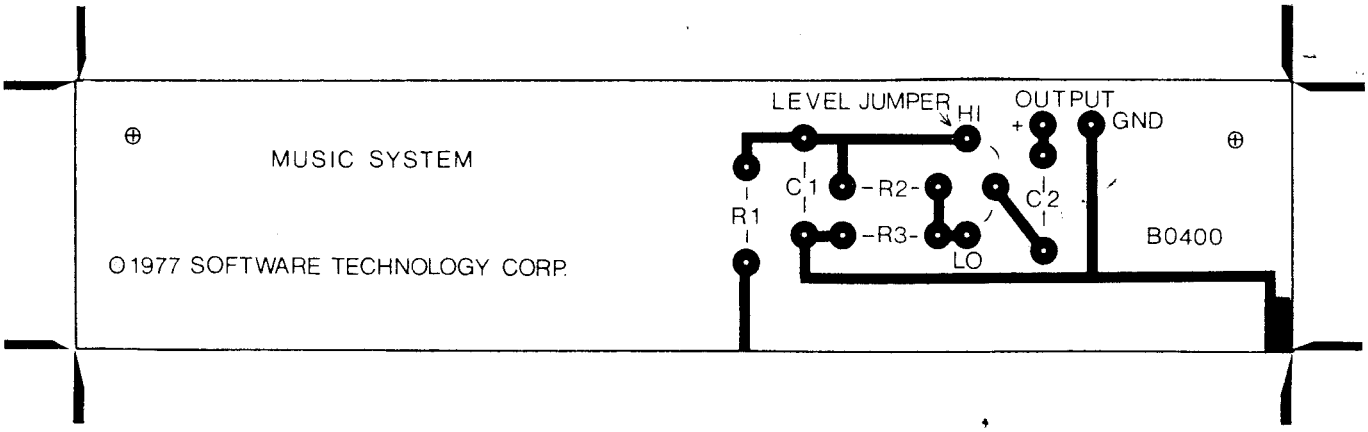

Parts Layout

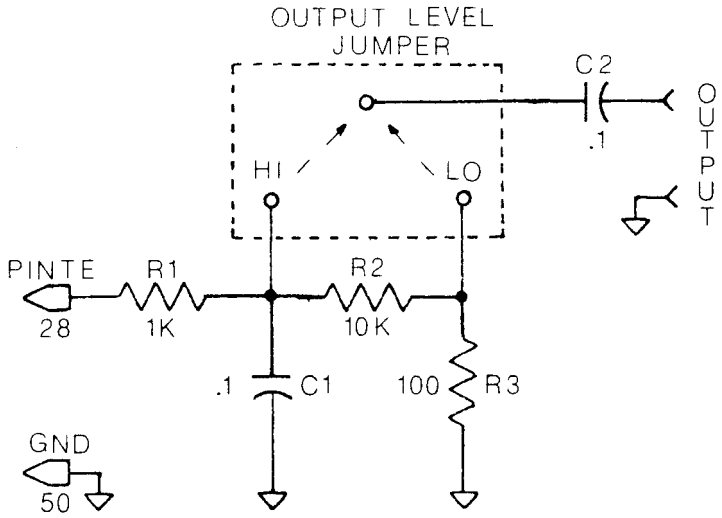

Schematic

III. THE MUSIC PROGRAM

A. The Command Processor

The Command Processor communicates with the system input/output devices via the SOLOS/CUTER interface, a description of which is included here as an appendix. Characters from the system input device are collected in a 72 byte line buffer observing the usual conventions, i.e., the input string is terminated by a carriage return, 'DEL' or 'RUBOUT' erases the last character entered into the buffer, and input beyond the 72 byte limit is lost. A 'NUL' (CTL-@ or CTL/shift/P on a TTY or 'MODE' on a Sol) will erase an entire line.

Upon receiving a carriage return, the first character (if any) in the buffer is examined. If it is numeric, the whole line is assumed to be a line of source text and is passed to the File Editor for insertion in the current file. If it is alphabetic, the line is further examined to determine the command and operand fields.

Operands are optional; when they are present they are separated from the command and from each other by one or more spaces. The command may be any number of characters; however, only the first is significant. Operands which denote addresses are one to four hexadecimal digits, and those that denote line numbers are one to four decimal digits. No operand may have the value of zero because a value of zero indicates an omitted operand.

The Commands Only the first letter of a COMMAND is significant

The following are the various commands that are processed by the Music System.

Command List: [( ) indicates optional operand]

NEW (addr1)

Establishes a new text file residing in memory beginning at 'addr1'. If the operand is omitted, 'addr1' defaults to the first available address following the Music System program. If a file already exists at 'addr1', it will be lost. The beginning and ending addresses of the file are set to the same value and are displayed. 'NEW' is automatically performed when the program is first executed.

Examples:

NEW — This destroys any file that was existing at the current file address. The current file address is set to the default.

NEW F00 — A new file is defined to begin at location F00 (hex). Any data previously there will be destroyed.

FILE (addr1)

This validates the file beginning at 'addr1'. If the operand is omitted, 'addr1' defaults to the current file location. The file structure is verified until an 'end of file' marker is found. The beginning and ending addresses of the file are established, then displayed.

Examples:

FILE — Beginning at the current file address, memory is verified to be a valid file. If no error is detected, the beginning and ending addresses are displayed.

FILE C00 — This address (C00 hex) becomes the current file beginning address. This file is then verified and, if no errors are detected, the beginning and ending addresses are displayed.

LIST (line1 (line2))

This displays the lines in the current file with line numbers between 'line1' and 'line2' inclusive. If the second operand is omitted, only the line numbered 'line1' (if it exists) is displayed. If both operands are omitted, the entire file is displayed.

Pressing the space bar during a listing will temporarily pause the listing until any other key is pressed, whereupon the listing is resumed. A listing may be terminated at any time by entering a 'NUL' (CTL-@ or CTL/shift P on a TTY or 'MODE' on a Sol).

Examples:

LIST	The entire current file is displayed to the current SOLOS/CUTER output device.
LIST 123	Only line number 123 of the current file is displayed.
LIST 10 55	All lines beginning with line 10 and ending with any line greater than or equal to 55 are displayed.

DELETE line1 (line2)

This command is used to delete one or more lines from a file. If only 'line1' is specified, then only that line will be deleted. If both operands are specified, all lines between 'line1' and 'line2' inclusive will be deleted.

Examples:

DEL 10	Line 10 is deleted.
DEL 12 15	All lines from 12 to 15 inclusive are deleted.

SCORE (addrl)

The current file is compiled, and the resulting binary object code is entered into memory beginning at address 1. If 'addr1' is omitted, the address defaults to be the first address after the current file. The beginning and ending addresses of the binary code are displayed after compilation.

Examples:

SCORE	The current source file is compiled and the binary object code is stored in memory beginning at the location just following the end of the source.
SCORE 2100	The current source file is compiled and the binary object code is stored in memory beginning at location 2100 hex.

PLAY (addrl) (This command causes the music to be played . . .)

This command generates musical tones according to the binary code at 'addr1'. If the operand is omitted, 'addr1' defaults to the same address as that in the last 'SCORE' or 'PLAY' command.

Examples:

PLAY — The previously SCOREd binary object code will now be played. The address of the binary object code is determined from the most recent SCORE or PLAY.

PLAY 2100 — The binary object code residing at memory location 2100 hex will now be played. If there is not valid binary object code at the specified address for the Music System, the results can be unusual.

RESERVE addr1 *with an operand*

RETURN *with NO operand*

'addr1' marks the end of the memory space to be used by the Music System. The system's initial boundary is the address of SOLOS/CUTER as supplied by SOLOS/CUTER. If the operand is omitted, 'RETURN' is executed as follows:

Exit by jumping to the 'RETURN' entry point (displacement 4) in the SOLOS/CUTER jump table.

Note: Since "R" represents two different commands, the operand is required when "RESERVE" is to be executed. Otherwise, "RETURN" is executed.

Examples:

RET — Control is returned to SOLOS/CUTER.

RES 4000 — Memory address 4000 (hex) is reserved as the highest memory address to be used by the Music System. This would be a valid RES for a 16K SOLOS system.

B. The File Editor

The File Editor provides the means of entering and altering a musical score in symbolic notation for compilation by the

Music Compiler. The file structure used by the Editor is the same as that used by Processor Technology's ALS-8 and Software Package #1.

All lines should begin with a four digit decimal line number followed by at least one space and terminated by a carriage return. The Editor maintains all lines in numeric line number sequence regardless of the order in which they are entered. If a line number just entered already exists, the new line just entered will replace the previous line.

The following must be observed if you intend to use the Music System in conjunction with one of the many compatible editors such as ALS-8:

1. Use the 'FILE' command to establish or reestablish the internal file limits when entering the Music System after creating or altering a file with another editor.

2. Use the appropriate command (such as 'FCHK' for ALS-8) to establish or re-establish the internal file limits when entering an external editor after creating or altering a file with the Music Program.

3. The File Editor supports from 1 to 4 digit hexadecimal line numbers. Because some other editors do not, it is recommended that the user always enter lines with exactly four decimal digits. If this practice is maintained, the files created by the File Editor will actually be compatible with other editors and not just logically compatible.

Remember, each editor acts independently and maintains its own internal file pointers which must be updated whenever the file is altered.

C. The Compiler

The Compiler converts the symbolic musical score, the high level Music language, in the current editor file to the binary form required by the tone generator subroutines.

Although it is not necessary to be able to 'read' music to use the Music Compiler, some familiarity with standard musical notation will be helpful.

Entering a musical score into the music System is little more than a matter of transcription. Virtually everything on a page of sheet music can be represented in the high level music language of the Compiler. Rather than launch into a long list of symbols and their meanings at this point, let's consider the information--explicit and implied-contained in a typical musical score and see how it is transcribed for the computer.

Figure 2 is a piano arrangement of a Sarabande by Johann Jakob de Neufville. Figure 3 is the high level music language arrangement of the same piece. It doesn't look very musical; however, there is nothing intrinsically "musical" about Figure 2 either except our prior knowledge of what written music is supposed to look like. With one or two exceptions (ornamentation has been omitted for clarity, and some editing has been done to meet the computer's three voice limit), both figures contain the same information.

In Figure 3, each line begins with a four digit line number followed by a space. This is required by the File Editor so as to properly order the lines and has no other bearing on how the music is compiled. For the most part, the Compiler treats the file as one long character string and ignores line numbers, line boundaries and spaces. There are (always) exceptions. The following references to line numbers refer to Figure 3.

A slash (/) indicates comments, and the rest of the line is ignored. The contents of Lines 10 through 40 are self-explanatory. Line 50 defines transposition. This symbol does not correspond to anything in Figure 2. Its meaning and purpose will be described later. Line 60 defines the key signature. In this case, it is two flats (& = flat, # = sharp). The number of sharps or flats in the key signature is sufficient to define the key. The Compiler knows the key and which notes are affected.

Line 70 defines the time signature and tempo. The Sarabande is in three-quarter time, i.e., three beats to a measure and one beat to each quarter note. The Compiler does not worry about the number of beats in a measure. It leaves it to you to define the notes in each measure. "NQ" correlates the length of a quarter note to the length of a beat (H = half note; Q = quarter note; I = eighth note; S = sixteenth note). "=50" equates the length of a beat to 50 iterations of one of the many loops in the tone generating subroutines. The actual number has to be determined by trial

and error as is the case when determining the correct metronome setting for a particular piece.

The music is subdivided into parts, measures and voices. A part defines one or more measures that are to be played at the same tempo and usually corresponds to a section of the piece that may be repeated, i.e., a phrase, verse, stanza, refrain, chorus, etc. Each part is identified by a letter (A - Z). Up to 26 parts may be defined, in any order, but they are always played in alphabetic sequence. Line 80 marks the beginning of Part "A" which includes the first eight measures of the piece. Part "B" is defined in Line 170 as a repeat of Part "A". Part "C", in Line 180, includes the remainder of the piece except for the last measure. Although it is not specified in the music, the last measure will be played second ending style. Part "D" contains the last measure as written (the first ending) followed by Part "E" which is a repeat of Part "C". A slightly modified last measure (the last note held an extra beat) is defined as Part "F" (the second ending), and it is played a little slower at 68 counts per beat.

Measures are indicated by the letter "M" followed by a number and at least one space. This is one of the few instances when a space is required by the Compiler. The measure numbers themselves have no meaning to the Compiler and serve only as a reference between the lines of text and the printed musical score. This is quite handy, however, when you attempt to "debug" the music!

A voice is a separate "strand" of music, in harmony or counterpoint, as in a three voice fugue. Voices are often called "parts", as in three part harmony, but voices should not be confused with the meaning of "part" in the context of this Compiler. Up to three voices may be defined in a measure. They are identified as V1, V2 and V3 (see Line 90) and may appear in any order. As a convenience, V1 is always assumed at the beginning of every measure. It is helpful if a convention is followed in assigning notes to voices. V1 usually carries the melody or highest notes, V3 carries the bass, and V2 fills in the middle. For reasons too complicated to go into here, the music will sound better if the voices conform to the natural flow of the various threads of notes rather than jumping about. This is especially important when arranging fugues where the voices often cross over one another or disappear for a measure or two.

Each of the symbols that represent a note in Figure 2 convey two pieces of information:

1. Its position on the staff along with the key signature and the interpretation of the clef it belongs to defines the note to be played.

2. Its shape, along with the time signature, defines how long (relative to a beat) the note is to be held.

The Music System uses two symbols to convey the same information. A single letter defines the length of the note or notes that follow it (W = whole; H = half; Q = quarter; I = eighth; S = sixteenth; T = thirty-second; X = sixty-fourth). Dotted notes are indicated by a period (.) after the letter. A colon (:) indicates triplets, and these note length modifiers (. and :) must immediately follow the letter identifying the primary note length. "Q.:" means the notes following are played as dotted quarter notes in triplet time, i.e., three such notes would equal a dotted half note. The combination, "Q:.", is not allowed.

The staff position of a note is defined by its relation to Middle C. Middle C is always zero and every other note is a positive or negative displacement from it. Notes above Middle C are plus and those below are minus (see Figure 1). The displacement is counted from 0 to 9 and A to F where A=10; B=11; C=12; D=13; E=14; and F=15--in a word, hexadecimal. A dollar sign ($) defines a rest.

Since most notes in the treble clef are above Middle C and most notes in the bass clef are below it, specifying the clef ahead of time eliminates the need for a lot of +'s and -'s. An asterisk (*) declares the treble clef, and all notes following are assumed to be "+" unless otherwise indicated. Similarly, an 'at' sign (@) declares the bass clef, and all notes following are assumed to be "-" unless otherwise indicated.

Finally, accidentals are indicated with the sign immediately following the note to be modified (# = sharp; & = flat; % = natural). Accidentals stay in effect until the end of the measure or are altered by another accidental. Double sharps or flats are not supported.

You should now be able to decipher all the symbols in Line 90 and relate them to Measure #1 of the musical score in Figure 2.

Line 90 contains many extra spaces. For demonstration purposes, a space has been inserted between every symbol or symbol group. Since each extra space requires an additional key stroke plus one byte of memory and is not required by the Compiler, they should be used only where necessary to improve the readability of the score. Line 100 illustrates the preferred coding style. The bass clef declaration (@) after V3 is redundant, but it eliminates any ambiguity in the interpretation of the notes in V3. Compare it with Line 130 which has no extra spaces or redundant symbols. "V38" at the end of the line will be compiled, correctly, as "V3@H.8" because the clef and note duration declared in V2 of that measure are still in effect, but the line is very difficult to read. Keep in mind, this is a very simple piece of music. The Compiler can accommodate up to 32 notes per voice per measure, and some Frescobaldi toccatas reach the limit!

There are a few more items of interest in this piece. Measure #5 presents a very common problem. More than three notes are to be played at once. The wiggley line indicates the four notes in the treble clef are to be played as an arpeggiated chord. One possible solution is to play it as a long slur similar to the one in the following measure. The same is true in Measure #16. Measures 22 and 24 both define four voices. In these cases, the lower voice in the treble clef can be dropped without serious damage to the music. Measures #8 and 28 define five voices. An experienced musician will probably solve these problems without much difficulty. For others, it will be a matter of blind luck or painstaking trial and error. Ultimately, the "right" solution is the one that sounds best.

The third and fourth notes in the treble clef of Measure #11 illustrate an item of fine tuning. The two notes are tied which means they are to be played as one note. Since the computer always plays "legato", tied notes usually do not present much of a problem. However, a very soft, almost inaudible "sh" sound is produced by the tone generating routines whenever a new note is started. Ordinarily the sound is masked by the changing note, but it may be noticed in the high treble. Line 210 gets around this anomaly by coding the tied 1/32 - 1/16 pair as a dotted 1/16--an equivalent time value.

The situation in Measure #6 is just the reverse. The last two notes in the treble clef are not tied and should be played as two distinct notes. The quote (") defines a long articulation which is played as a short rest equal to about two-thirds of a sixty-fourth note. A short articulation, defined by an apostrophe (') and just half as long, is preferred in some situations. The staccato, defined by a comma (,), is very much like an articulation except the rest added is equal to half the value of the note. In all cases, the duration of the note preceding is reduced to compensate for the added rest. Articulations and staccato affect only the note they follow.

In Line 330, note that the articulation comes after the accidental. Compare V2 in that line with V2 in Line 310. The same notes, only one is defined as bass clef and the other as treble clef.

The length of a measure is equal to the length of the longest voice defined in it. Shorter or undefined voices are filled with rests. In Line 220, the quarter note rest in V3 is optional.

Now for Line 50. For many reasons--mostly having to do with the speed and architecture of the 8080--some of the notes generated by the Music System are not as well tempered as others. On the other hand, being able to play three notes at a time on a computer without special hardware is quite an accomplishment. It is not uncommon for a piece of music to be transposed as it is transcribed from one instrument to another. It is the case with the computer. The trick, as with any instrument, is to find the key which sounds the best. The character " < " or " > " , followed by a number, defines the direction and number of semitones the piece is to be transposed (< = down; > = up). Any note falling outside the computer's four octave range as a result of transposition will be played at the nearest octave within the range.

The assumption thus far has been that the music being transcribed is in piano or similar type score, i.e., treble and/or bass clef. To take advantage of the wide variety of music published for other instruments in different clefs (soprano, alto, tenor, etc.), each voice may be defined as belonging to a different clef. A clef definition consists of a voice declaration followed by an up arrow (↑) and a number that is the displacement from Middle C in the clef being defined to Middle C in the treble clef.

For example, the clef definition for a trio might be:

V1 ↑-2 V2 ↑-6 V3 ↑-8

where voices 1, 2 and 3 are written in soprano, alto and tenor clef respectively. Because cleft are defined relative to the treble clef, a bass clef declaration (a) cannot be used with a voice that has a clef definition.

Another example:

V2 ↑-6 V3 ↑-C

where voices 1, 2 and 3 are written in treble, alto and bass clefs. By redefining the bass clef this way, all clef symbols are eliminated and all notes are transcribed as if they were in a treble clef. (The clef definition need appear only once at the beginning of the score.)

An interesting by-product of clef definition is the ability to play in any mode. Modes are defined like clefs except the displacement is the distance from Middle C to the "final" note of the mode. Clef displacements may be positive or negative, and multiple displacements can be added algebraically prior to the definition.

Example:

> Voice 1, transcribed from alto clef (-6), to be played in mixolydian mode (+4), one octave higher (+7) = V1 ↑+5.

D. The Tone Generator

The tone generating subroutines convert the binary output of the Compiler into music by manipulating a train of squarewave pulses on one of the 8080 status lines. The tempo of the piece can be preset or dynamic depending on the setting of the sense switches (input port 255).

If the switches are all zero, each part will be played at the tempo specified when the piece was compiled. If non-zero, the hexadecimal value of the switches is used, dynamically, as the tempo of each part. The zero/non-zero determination is made at the beginning of each part and determines the mode (preset/dynamic) for the entire part.

Once the correct tempo of a part has been determined by experimentation, the switch setting (hexadecimal) can be entered into the score to be used when the piece is played in concert. Tempo settings below 40 can cause a frequency shift and should be avoided. If necessary, use a smaller note to define the time signature. "NI=80" will be played as fast as "NQ=40".

'Reset' is the only way to stop playing a piece once started. What happens after a 'Reset' depends on the hardware. Most 8080 systems will begin execution at location 0, which is the one (and only) entry point in the Music System, and the Command Processor will gain control. If resets are vectored to a ROM resident monitor, enter the appropriate command to get back to location 0.

Because the waveforms are generated by software, the frequency produced for a given note will depend on the speed of the micro-processor. Not all 8080 systems are alike. The program, as supplied, has been optimized for either an Intel 8080A (running at a 500 nanosecond cycle time and no wait states) or the Sol which runs 2% faster. The frequency tables have been tuned as well as possible to produce an equally tempered scale at A=440. In order to accommodate the wide range of 8080 compatible CPU's and musical tastes, the following tuning information is provided.

There are seven bytes, hexadecimal locations 699 to 69F, inclusive, that serve as adjustable time wasters. By substituting faster or slower instruction in these locations, the speed of the primary control loop can be varied over a wide range. Not just any instruction will do, however. Only those instructions that do nothing to alter the state of the various flags and registers should be used.

The standard 500NS 8080 setting is as follows:

```
32 F4 07    STA     07F4H      13
F6 00       ORI     0           7
F6 00       ORI     0           7

                                27 cycles total
```

The standard setting for the Sol (2% faster) is as follows:

```
32 F4 07    STA     07F4H      13

00          NOP                4

00          NOP                4

00          NOP                4

00          NOP                4

                                          29 cycles total
```

Any instruction or instruction group in the following list may be used. Instructions not listed are not recommended.

OPCODE (HEX)	MNEMONIC(S)	CYCLES (8080A)
00	NOP	4
F6 00	ORI 0	7
3C 3D	INR A;DCR A	10
C3 A0 06	JMP 06AOH	10
32 F4 07	STA 07F4H	13
22 F4 07	SHLD 07F4H	16
34 35 B7	INR M;DCR M;ORA A	24
E3 E3	XTHL;XTHL	36

The shortest total delay possible is 10 cycles, and the longest is 108 cycles which nearly doubles the total loop time.

The note/frequency table begins at Location 703 (hex). The first entry defines the lowest note (C) two octaves below Middle C. Each entry is an eight bit, unsigned, binary value that represents a loop count to be reduced to zero between each squarewave cycle for every semitone in the defined range. The last entry at 735 (hex) represents the highest note (D) two octaves above Middle C. The total range is four octaves plus two semitones.

E. Rules of Thumb

One minute of music typically requires about one K of memory. The size of the binary object code produced by the Compiler tends to be about as big as the source file being compiled.

When a piece of music is very large, or memory is very short, it will be necessary to compile 'in place'. That is, the object code is written over the source file as the compilation proceeds. To do this successfully, the Compiler needs a head start of about 600 bytes. For this reason, it is suggested that large files be started at about F00 (e.g., "FILE F00") to leave enough headway when compiling in place (e.g., "SCORE 900").

IMPORTANT NOTE: Please don't forget to save the source file on tape or other media before compiling in place or it will be lost forever.

Source files and the compiled object code are both relocatable; that is, once saved on tape or other media they may be reloaded at any location.

IMPORTANT NOTE: Please don't forget that the tempo can be dynamically controlled by the sense switches (port 255). These sense switches must be zero for a piece to be played at the tempo specified in the source file when the piece was scored.

IV. HOW TO USE THE MUSIC SYSTEM

After reading this manual, the best way to learn to use the Music System is to play the selections provided with it. These selections will be enjoyed, and they serve as an example of how to transcribe or compose music yourself.

The Music System is distributed on cassette tape. Side 1 is recorded at 1200 Baud CUTS format, and Side 2 is recorded at 300 Baud Kansas City Standard format. The format of the data is described in the SOLOS/CUTER interface specification included here as an Appendix.

The tape consists of the following files:

File No.	File Name		Address (in hex) Load	End of Source	End of Object
1	MUSIC	The Music Program in object form must be loaded and executed at location zero. Memory is used up to and including 08D2(hex). This must be executed under the control of SOLOS, CUTER or compatible surrogate.	0000		
		Music Scores in Source Form			
		Selection			
2	PRELD	Prelude in C Major by J. S. Bach	08D3	1280	1B87
3	ALLEG	Allegro by W. F. Bach	08D3	0BA4	0DC2
4	SARAB	Sarabande by Johann Jakob deNeufville (Score as example-Appendix B)	08D3	0E71	1299
5	BOURE	Bouree by G. F. Handel	08D3	0D07	0FED
6	AIR	Air with Variations (The Harmonious Blacksmith) by G. F. Handel	08D3	15C9	2381
7	CHORL	Chorale (Jesus, Joy of Man's Desiring) by J. S. Bach	08D3	1186	17CA
	END				

Arrangements by Jon Bokelman

IV. HOW TO USE THE MUSIC SYSTEM (cont.)

The following are examples of what you need to enter via the keyboard in order to play some of the selections included with the Music System. These examples assume:

1. The Music System Circuit Board was assembled and is properly installed and connected to an amplifier.

2. For convenience, the examples show only what you would key in to SOLOS.

3. Adequate memory, beginning at location zero, is operational.

4. The Music System cassette is rewound and placed into a cassette player. The cassette player must be turned on and set for "PLAY".

A. Loading the Music Program with SOLOS

Enter:	GET	Tells SOLOS to load the next (or first) file on the tape.
or:	GET MUSIC	Tells SOLOS to look for the file "MUSIC" and then load it.

B. Loading and executing the Music Program with SOLOS

Enter:	XEQ	Tells SOLOS to load the next file and then execute it.
or:	XEQ MUSIC	" " " "
or:	GET EXEC 0	See above. Then we tell SOLOS to execute it.
or:	GET MUSIC EXEC 0	See above. See above.

IV. HOW TO USE THE MUSIC SYSTEM (cont.)

C. Loading and executing the Music Program and playing the Prelude in C Major.

Enter:	XEQ MUSIC	Loads and executes the, Music Program.
	RET	Enter this to the Music Program to return control to SOLOS.
	GET PRELD	Tells SOLOS to read in the Prelude.
	EXEC 0	After Prelude is read in, places the Music Program in control.
	FILE	Tells Music Program to verify the file limits of the file just gotten from tape.
	LIST	Look at this file.
	SCORE	Compile this file.
	PLAY	And finally play it.

D. Playing the Allegro after the Prelude in example (C) above.

Enter:	RET	Returns control to SOLOS.
	GET ALLEG	Read the Allegro into memory.
	EXEC 0	Returns control to the Music Program.
	FILE	Verifies the new file just read in.
	LIST	Looks at this file.
	SCORE	Compiles it.
	PLAY	And plays it.

IV. HOW TO USE THE MUSIC SYSTEM (cont.)

E. An abbreviated method to play every selection on the Music System.

Enter:	XE	Load and execute the Music Program.
	R	Return to SOLOS
	CU MU 0	Define a custom command called "MU" for "MUSIC".
	GE	Get Prelude.
	MU	Transfer control to the Music Program.
	F	Verify the file.
	S	Score it.
	P	Play it.
	R	Return control to SOLOS.
	GE	Get Allegro.
	MU	Transfer control to Music Program.
	F	Verify file.
	S	Score it.
	P	Play it.
	R	Return control to SOLOS.
	GE	Sarabande
	MU	
	F	
	S	
	P	
	R	

IV. HOW TO USE THE MUSIC SYSTEM (cont.)

Enter:	GE	Bouree
	MU	
	F	
	P	
	R	
	GE	Air
	MU	
	F	
	P	
	R	
	GE	Chorale
	MU	
	F	
	P	
	R	. . . and back to SOLOS having played all six selections.

APPENDIX A

MUSICAL NOTE SYMBOLS

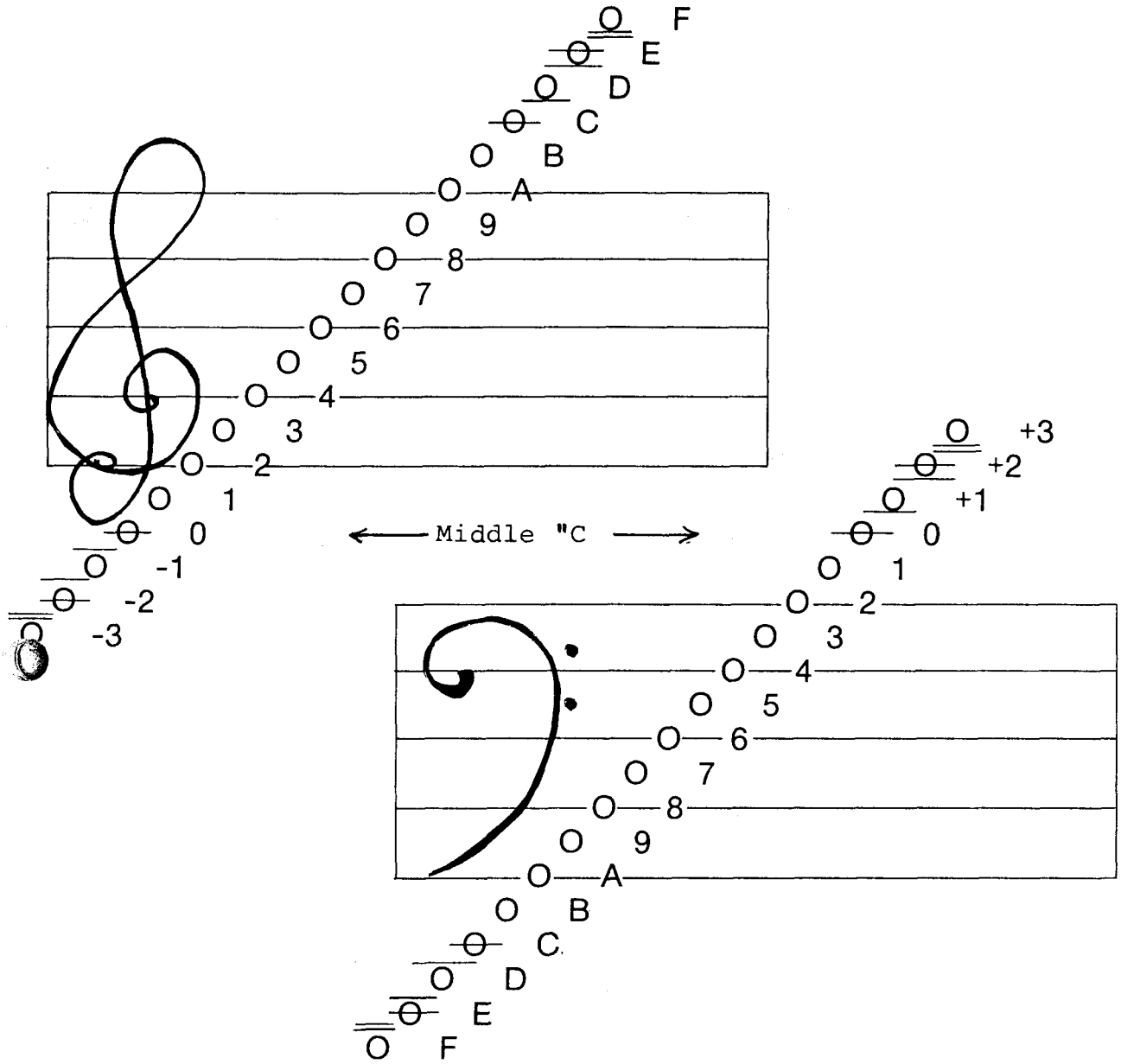

Note Modifier	Name	Musical Example
#	Accidental Sharp	♯
&	Accidental Flat	♭
%	Accidental Natural	♮
'	Short articulation	none
"	Long articulation	none
,	Stacatto	ṗ

Figure 1

APPENDIX B

Sarabande

Adagio con espressione

Johann Jakob de Neufville
(1684-1712)

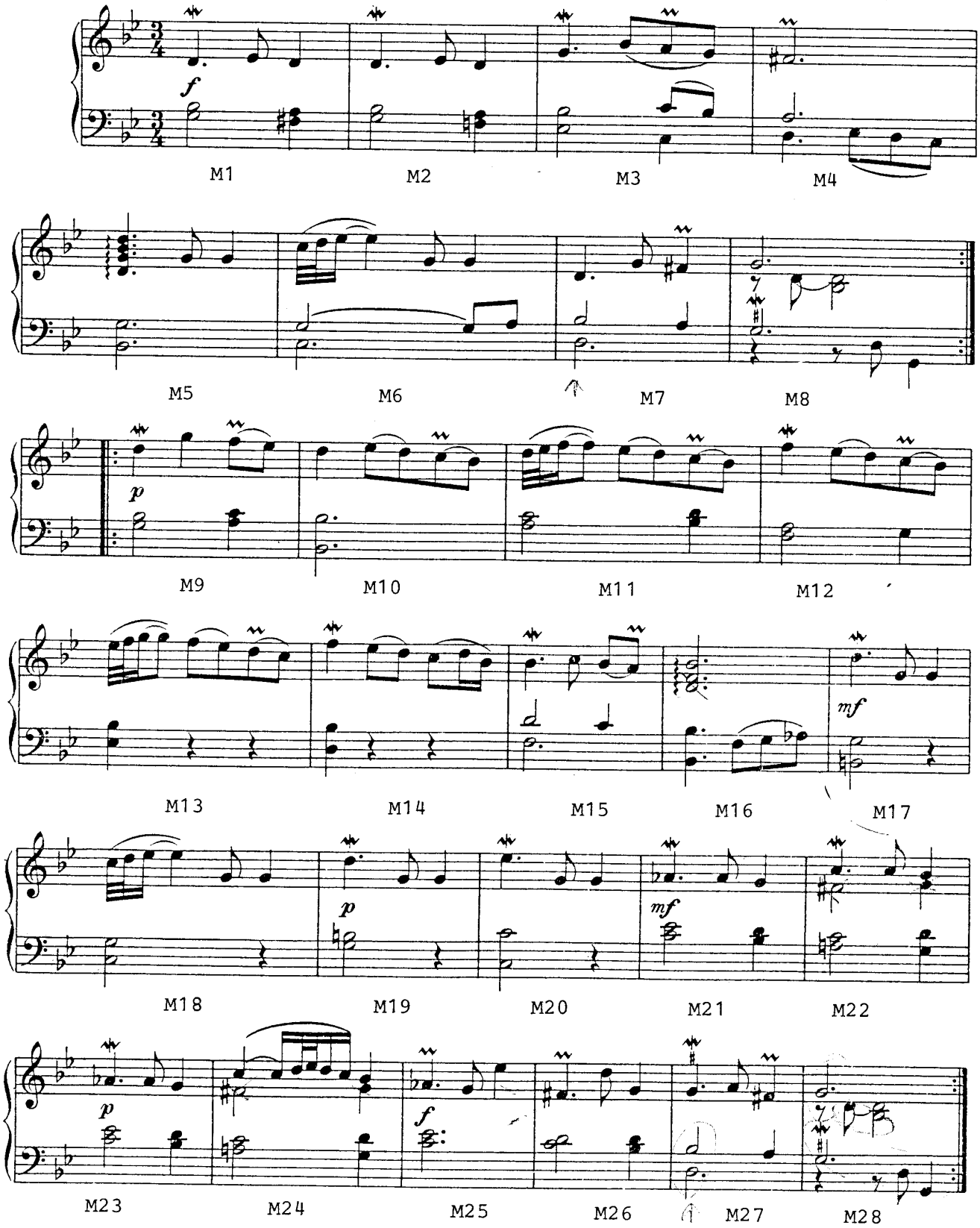

Figure 2

APPENDIX B

```
0010 / SARABANDE
0020 / BY JOHANN JAKOB DE NEUFVILLE
0030 / FROM BACH'S "DAS KLEINE KLAVIERBUCH"
0040 /
0050 <4
0060 K2&
0070 NQ=50
0080 PA
0090 M1 V1 * Q. 1 I 2 Q 1  V2 @ H 1 Q 2  V3 @ H 3 Q 4#
0100 M2 *Q.1I2Q1 V2@H1Q2 V3@H3Q4%
0110 M3 *Q.4I654 V2@H1I01 V3@H5Q7
0120 M4 *H.3# V2@H.2 V3@Q.6I567
0130 M5 *X14T6S8Q8I4"Q4V2@H.3V38
0140 M6 *T78S9Q9I4"Q4  V2@H3I32 V3@H.7
0150 M7 *Q.1I4Q3# V2@H1Q2 V3@H.6
0160 M8 *H.4 V2*I$1H-1 V3@Q.3I6QA
0170 PB RA
0180 PC
0190 M9 *Q8BIA9 V2@H1Q0 V3@H3Q2
0200 M10 *Q8I9876 V2@H.1 V3@H.8
0210 M11 *T89I.AI8765 V2@H0Q+1 V3@H2Q1
0220 M12 *QAI9876 V2@H2Q3 V3@H4Q$
0230 M13 *T9AI.BIA987 V2@Q1 V3@Q5
0240 M14 *QAI987S86 V2@Q1 V3@Q6
0250 M15 *Q.6I765 V2@H+1Q0 V3@H.4
0260 M16 *S13Q6Q.6 V2@Q.1 V3@Q.8I432&
0270 M17 *Q.8 I4"Q4 V2@H3 V3@H8%
0280 M18 *T78S9Q9I4"Q4 V2@H3 V3@H7
0290 M19 *Q.8I4"Q4 V2@H1% V3@H3
0300 M20 *Q.9I4"Q4 V2@H0 V3@H7
0310 M21 *Q.5&"I5Q4 V2*H2Q1 V3@H0Q1
0320 M22 *Q.7"I7Q6 V2@H0Q+l V3CH2%Q3
0330 M23 *Q.5&"I5Q4 V2@H+2Q+1 V3@H0Q1
0340 M24 *Q7S7T89S87Q6 V2@H0Q+1 V3@H2%Q3
0350 M25 *Q.5& I4 Q9 V2* H.2 V36@H.0
0360 M26 *Q.3#I8Q4" V2@H+1Q+1 V3@H0Q1
0370 M27 *Q.4I5Q3# V2@H1Q2 V3@H.6
0380 PD
0390 M28A *H.4 V2*I$1H-1 V3@Q.3I6Q8
0400 PE RC
0410 PF =68
0420 M28B *W4 V2*I$1H.-1 V3@Q.3I6H8
```

Note: A more complex arrangement of this piece is distributed with the Music System.

APPENDIX C

High Level Music Language Summary

Input to the Compiler is free form and consists of single character symbols and multi-character symbol groups. A symbol group consists of a symbol and one or more symbol modifiers. With two exceptions, spaces are optional between symbols and symbol groups. Symbol groups may not contain imbedded blanks and may not be continued across a line boundary.

All numeric data is interpreted as hexadecimal.

Note Value Symbol	Musical Equivalent	Name of Note
W		Whole note
H		Half note
Q		Quarter note
I		Eighth note
S		Sixteenth note
T		Thirty-second note
X		Sixty-fourth note

Note Value Modifier	Name	Musical Example	Time Value Multiplier
.	Dotted note		1-1/2
:	Triplet		2/3
$	Rest (The rest is for the duration of the Note Value Symbol)		

APPENDIX C (cont.)

Symbol	Modifier	Meaning
/	(None)	All characters on the rest of line are ignored.
P	Any letter (A-Z)	Define beginning of a part identified by the modifier. Any previous part is ended. If the part was previously defined, the old definition is lost.
R	Any letter (A-Z)	Repeat the part named by the modifier. If the part is not previously defined, error will be posted. This symbol should be preceded by a part definition and followed by a tempo group and/or another part definition.
M	Any character or characters	Define the beginning of a measure. Any previous measure is ended. The modifier is a sequence of characters and typically is a user defined sequence number. It must be terminated by a space or carriage return.
V	Digit (1, 2 or 3)	All the notes following are added to any previous notes of this measure belonging to the voice named by the modifier. If a voice is assigned more than 32 notes, an error is posted.
<	Hex Digit (0-F)	All the notes following are transposed down the number of semitones specified by modifier.
>	Hex Digit (0-F)	All the notes following are transposed up the number of semitones specified by the modifier.
*	(None)	Unless otherwise indicated, all notes following are assumed to be "+" (treble clef).
@	(None)	Unless otherwise indicated, all notes following are assumed to be "-" (bass clef).
↑	Signed Hex (+ or -) (0-F)	Transpose only those notes following that belong to the current voice up or down the number of whole steps indicated in the modifier.

Symbol	Modifier	Meaning
K	Digit. Char (0-7)(# or &)	Key signature is defined by number and type (sharp or flat) specified in the modifier. If this symbol group is omitted, the key defaults to C major (no sharps or flats).
N	Char (H,Q,I,S)	Correlates the length of the note type in the modifier to the length of a beat.
=	2 Digit Hex (00-FF)	Equates the length of a beat to the number of internal cycles specified by the modifier.

APPENDIX D

Error Codes

The error routines contained in the software are designed to detect most honest errors such as incorrect syntax, invalid operands, etc. Any deliberate attempt to make the System fail will probably succeed. Whenever an error is detected, a coded error message is written to the system output device along with the line or statement containing the error. In most cases, a question mark (?) is substituted at or near the character that caused the error. When an error is detected while compiling a score, the binary object produced should be considered invalid.

Error No.	Meaning
0	A hexadecimal digit was expected at this location but none was found. This is the most common error, and it often appears when least expected.
7	The operand is not within the address space managed by the system, or the assigned memory space has been exhausted.
2	The file structure is invalid.
3	The 32 notes per voice per measure limit has been exceeded. (Staccato and articulation count as two notes.)
4	The voice specification is invalid. Only three voices are supported.
5	The key specification is invalid. Either the number is greater than seven or a "#" or "&" was expected but none was found.
6	The time signature is invalid. A note value was expected (H, Q, I or S), but none was found.
7	The "part" or "repeat" specification is invalid. A letter, A - Z, was expected but none was found, or the part to be repeated is not defined.

APPENDIX E

SOLOS/CUTER Interface Specifications

The SOLOS/CUTER interface is based on:

1. A predefined set of 'pseudo' I/O ports allowing software compatibility and providing an easy means of supporting any I/O device.

2. A well defined set of register usage conventions.

3. A system jump table of entry points.

4. A defined tape format including headers and CRC characters.

Both SOLOS and CUTER observe and support these specifications such that any program written using this interface will function (except for specific device dependencies) under the control of either SOLOS or CUTER. A part of the interface specifications also allows a user written SOLOS/CUTER surrogate. Such a surrogate, when properly written, will allow a program written for SOLOS/CUTER to function with the surrogate.

The first aspect of the interface is that of the pseudo ports. The basic SOLOS/CUTER interface allows the support of four 'pseudo' I/O ports (0 - 3). These pseudo ports are logical ports providing a reference for the program only. System input (keyboard) and output (display) are directed via these pseudo ports. The STANDARD definition for pseudo ports is:

Pseudo Port	Input	Output
0	Keyboard	VDM Display
1	Serial input	Serial output
2	Parallel input	Parallel output
3	User defined input	User defined output

These pseudo ports allow device independent I/O. Provided that device dependent character sequences are not used, an I/O request to pseudo port 0 appears to the requesting program to be the same as a request to pseudo port 1, 2 or 3. What this means is that, although four pseudo ports are defined in the interface specifications, a user written surrogate would not need to decode pseudo ports.

The second aspect of the SOLOS/CUTER interface is the defined register usage. Each of the system entry points has specific register requirements which will be discussed later.

Whenever a program is executed via SOLOS/CUTER the stack pointer, the stack, and registers HL are defined as follows:

1. The Stack Pointer (register SP) is valid and offers a useable stack. The size of this stack is not specified but should be adequate for at least a few calls. The executed program is expected to establish its own stack; however, some stack should be available.

2. The stack itself should be established such that:

   (a) A "REV instruction can be used as an exit by the executing program.

   (b) The locations at Stack Pointer -1 and -2 in memory contain the address of the executed program itself. This information can be accessed by machine code similar to:

```
LXI H,-1     A constant minus one.
DAD SP       HL=SP-1 now.
MOV A,M      A=our own high address.
```

   Code such as this can be used to allow a routine to be made self-relocating to a 256 byte boundary.

3. Registers HL contain the address of the SOLOS/CUTER jump table. Because this jump table may be located at any 256 byte boundary in memory, register L will be zero. Register H can then be used to alter the executing program accordingly. As noted later, the jump table also provides an indication whether the program is executing on a Sol or other computer.

The third aspect of the SOLOS/CUTER interface is the jump table. By making all system requests via this jump table, an executed program can be made compatible between SOLOS, CUTER or other properly written surrogate. The jump table is described on the following page, A more complete description is contained in the SOLOS/CUTER User's Manual.

SOLOS/CUTER JUMP TABLE

Address	Label	Length	Brief Description
xx00	START	1	This byte allows power-on reset for SOLOS. It is 00 hex on a Sol; 7F hex on other than a Sol.
xx01	INIT	3	This is a "JMP" to the power-on reset.
xx04	RETRN	3	Enter at this point to return control from an executing program.
xx07	FOPEN	3	Byte access file open.
xx0A	FCLOS	3	Byte access file close.
xx0D	RDBYT	3	Byte access read one byte.
xx10	WRBYT	3	Byte access write one byte.
xx13	RDBLK	3	Read an entire file into memory.
xx16	WRBLK	3	Write an entire file from memory.
XX19	SOUT	3	Standard character output routine. This must be an "LDA" pointing to the byte containing the current system output pseudo port value.
xx1C	AOUT	3	Character output to pseudo port specified in register "A".
xx1F	SINP	3	Standard character input routine. This must be an "LDA" pointing to the byte containing the current system input pseudo port value.
xx22	AINP	3	Character input to pseudo port specified in register "A".

The most often used routines are: RETRN, SOUT and SINP. Other entry points may or may not be used.

JUMP TABLE INPUT ENTRY POINTS

SINP address xx1F

This entry point will set register "A" to the current system input pseudo port. This must be an "LDA" instruction. After loading register "A", this entry point proceeds by executing "AINP" described below.

AINP address xx22

This entry point is used to input one character or status information from any pseudo port. On entry register "A" indicates the desired pseudo port. Because this entry point is a combination status/get-character routine, it is the user's responsibility to interpret return flags properly. When a character is not available, the zero flag will be set. When a character is available, the zero flag will be reset and the character will be returned in the "A" register. As an example, the following code will wait for a character to be entered:

```
 LOOP CALL  SINP    get status or the character
      JZ    LOOP    status says character not
                    available yet
      ...   ...     character is in register "A"
```

JUMP TABLE OUTPUT ENTRY POINTS

SOUT address xx19

This entry point will set register "A" to the current system output pseudo port. This must be an "LDA" instruction. After loading register "A", this entry point proceeds by executing "ROUT" described below.

AOUT address xx1C

This entry point is used to output the character in the "B" register to the pseudo port specified by the value in the "A" register. On return, the PSW and register "A" are undefined. All other registers are as they were on entry. A user written output routine (ROUT surrogate) may buffer or delay the output as required for the supported device.

The fourth aspect of the SOLOS/CUTER interface is the format in which the data is recorded on tape. When data is written to tape, it is referred to logically as a "file". Each file has its own header which describes the file. On cassette tape, each header is followed by the file itself. The file itself is written to tape in segments of 1 to 256 bytes. Each segment is immediately followed by a Cyclic Redundancy Check character (the CRC). The following is the general format of one file on cassette tape:

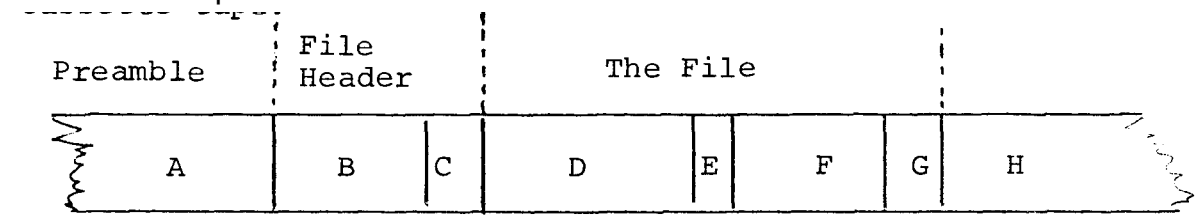

Where:

A. Preamble

Preceding every file header is a special preamble. This is a series of at least ten nulls (zeroes) followed by a one (01 hex). This special sequence, and only this sequence, indicates a probable file header follows.

B. File Header

This is the 16 byte file header. The layout of a file header is:

NAME	ASC	'ABCDE'	A 5 character file name.
	DB	0	Should always be zero.
TYPE	DB	'B'+80H	File type character. If bit 7=1, this is a non-executable data file.
SIZE	DW	LENGTH	Number of bytes in file.
ADDR	DW	FROM	Address file is to be read into or written from.
XEQ	DW	EXEC	Execution beginning address.
	DS	3	Space not currently used.

C. File Header CRC

This is the CRC character for the file header. If, when reading a file header, the CRC character is not correct, then the file header is to be ignored. A search would then be made for a new preamble (A above).

D. File Segment First

This is the first segment of the file itself. A segment is from 1 to 256 bytes. In this example, this segment is 256 bytes.

E. File Segment First CRC

This is the CRC character for the preceding segment-- in this example, the preceding 256 bytes.

F. File Segment Last

This is the last segment of the file. In this example, this is 44 bytes. Therefore, the length of this file is 256+44=300 bytes.

G. File Segment Last CRC

This is the CRC character for the preceding segment--in this example, the preceding 44 bytes.

H. Interfile GAP

This is a gap between files and is typically a clear carrier for about five seconds.

CRC Computation

The CRC character is computed for each segment or header. The following code performs the CRC computation assuming: Register "A" is the character just written to tape, and Register "C" is the final CRC. Register C should be set to zero prior to writing the first character of a segment. After writing the last character of a segment and executing this code, Register "C" is the CRC character for this segment.

An 8080 Subroutine to do CRC Computation

```
DOCRC  EQU  $        A=NEXT character and C=CRC
       SUB  C
       MOV  C,A
       XRA  C
       CMA
       SUB  C
       MOV  C,A
       RET
```